VISIONXS-IP-CPU-2F(M)-DP-HR-DH 2.0

KVM extenders, Article number A1110909



Front



Back

The matrix-compatible KVM-over-IP extenders of the VisionXS-IP-DP-HR 2.0 series extend keyboard, video, and mouse signals, as well as other peripheral data (e.g., audio and USB), via a standardized IP network infrastructure with CAT or fiber connection (up to 10,000 m). An extender system consists of a computer module (CPU) and a compatible console module (CON). Computers can be controlled in near real-time – both in extender and matrix applications. The VisionXS-IP-DP-HR 2.0 series supports DisplayPort 1.1 for high-resolution video up to 2560 × 1600 (60 Hz) or 4096 × 2160 (30 Hz). Video data is processed pixel-perfectly and offers excellent hand-eye coordination, thanks to bluedec™ – G&D's advanced, multi-stage, lossless compression technology.

SCOPE OF DELIVERY

Quantity	Description	Article number
2	DP1.4-Cable-M/M-2 SK13357 2m	A6300173
1	TypeC-Service-Cable-M/M-2, 2m, USB Type-A / Type-C	A6200112
2	Audio-M/M-2-ferrite cable 2m	A6300083
1	Audio adapter cable, 1x 3.5mm jack plug to 2x 3.5mm jack socket	A3110017
1	Safety instructions flyer - FCC class B	A9100371

DETAILS

VIDEO

- bluedec™ – advanced developed multi-stage compression for best video quality and practically latency-free transmission. This method enables pixel-perfect video transmission with efficient bandwidth use.
- The KVM-over-IP end devices can be flexibly combined with each other, even if they process different video signals (Mix & Match)
- EDID data utilization from the workplace monitor
- Flexible EDID profile options for optimized monitor settings
- Resolution up to
  2560 × 1600 @ 60 Hz,
  4096 × 2160 @ 30 Hz

SIGNALS

- Embedded stereo audio (DisplayPort Digital, 2 channel LPCM, AC3, DTS,
  sampling rate up to 192 kHz)
- Transparent bidirectional audio signals (stereo)
- GenericUSB support for USB classes HID (Human Interface Device), SmartCard and mass storage
- The product allows the use of a GenericUSB device via a console module. For this, both the used console module and the used computer module must support the use of a GenericUSB device.

TRANSMISSION

- At least one Layer-2-managed switch with Gigabit Ethernet is required, offering features such as QoS and VLAN. Additionally, adequate performance (forwarding bandwidth, switching bandwidth, forwarding performance, and uplinks) must be ensured, especially when using multiple network switches
- KVM-over-IP™ over IP-based networks (layer 3)
- The transmission distance between two active network components is up to 550 meters over fiber multimode optics, incl. transmission module(s)/SFP transceiver(s)

DEVICE

- Improved security through physical separation between workplaces and computers
- Access to standard interfaces of the computer, with no software installation required
- New enclosure design with improved cooling, optimized interface placement, and robust surface finishing – for higher reliability and long service life even in demanding environments
- Compact design for space-saving installation within a VisionXS 2.0 DeviceCarrier (1 or 3 RU)
- PowerPack not included in the scope of delivery
- DT variant:
  - Power supply via internal power supply unit
  - In combination with an external power supply, a redundant power supply can be established

  - RS232 is provided as standard
- 2C/2F variant (link aggregation): Two transmission paths (CAT or Fiber) can be combined via link aggregation, ensuring seamless failover and stable communication in case of a link failure.
- Extended USB input side with TypeC and separate USB K/M interface – enables the optional physical separation of keyboard/mouse signals and USB data stream for enhanced security.
- The devices are compatible with the ControlCenter-IP and ControlCenter-IP-XS series (matrix operation) and other KVM-over-IP end devices for computer and workplace connections (extender operation)

WARRANTY

- A 3-year, free of charge product guarantee
- For an additional fee guarantee extension possible

FEATURES

SECURITY FEATURES

- Permanent encryption of all communication and data transmissions, as well as sensitive information such as login credentials and passwords, guarantees a high level of security in critical environments
  - AES256-GCM for keyboard/mouse and control data
  - AES128-CTR for video, audio, GenericUSB and RS232
- Bootloader, operating system, and firmware form a "Trusted Computing Platform" with automatic integrity checks during system startup
- Integrated Trusted Platform Module (TPM) protects all access and configuration data from being spied on or tampered with by third parties
- Console modules do not store security-relevant information such as login credentials, which could be extracted in the event of device loss
- Monitoring of system states such as status, power supply, temperature and computer modules and console modules are monitored as well
- Each monitoring value can be enabled individually; critical states raise an alarm, which authorized users can acknowledge to downgrade it to warning level
- Syslog logging locally and to up to two servers, via TCP or UDP, with configurable port, eight severity levels per the syslog standard and ISO 8601 timestamps
- Logged events include user logins, failed login attempts, changes to user rights, connections to remote targets and failed backups
- SNMP agent supporting SNMPv2c and SNMPv3; for SNMPv3, authentication via SHA-1 through SHA-512, encryption with AES128, AES192 or AES256, and security levels up to authPriv
- Access to the SNMP agent can be restricted to defined source IP addresses or network segments (IPv4 and IPv6)
- SNMP notifications to multiple receivers, sent either as traps or as acknowledged informs, with a configurable severity threshold
- Comprehensive rights management and user administration, allowing precise control over which user can access which resources
- Option for activatable access protection (default operating mode in matrix systems), in which authentication is required before accessing computer sources
- Support for external directory services (Active Directory, Radius, LDAP) to meet company security policies
- To comply with individual password policies and improve security, password complexity can be configured system-wide
- Configurable login options, such as displaying terms of use or setting the maximum acceptable number of failed login attempts, can enhance system security
- The optional UID-Locking restricts the usable end devices, ensuring that no additional devices can be added or replaced after activation
- Auto Backup Function: Automates backups at user-defined intervals and replaces manual intervention – ensuring reliable, timely data protection without the need for continuous monitoring

- Freeze function: If the video signal is lost, the last displayed image is frozen and highlighted with a colored frame and timer
- 2-Factor-Authentication (2FA) – is integrated by default in KVM extenders and enhances security by requiring a second, possession-based factor during user authentication:
  - The traditional password authentication is combined with a time-limited, single-use code (Time-Based-One-Time-Password - TOTP)
  - You can choose between using the internal authentication server provided in the device or an external directory service
  - Authenticator apps or hardware token can be used
  - This additional layer of protection prevents unauthorized access and ensures the highest level of security, particularly in sensitive IT environments

OPERATION FEATURES

- Ready for operation out of the box, no additional configuration required in direct connection. IP address configuration and pairing are required when using multiple modules in a network setup
- Permanent keyboard/mouse emulation ensures a stable system
- Compatibility with special USB-HID input devices
- Operation via multilingual on-screen display (OSD) and hotkeys
- Configuration and update via the multilingual HTML5 web interface “Config Panel 21” (Java-free)
- Support of DDC/CI (Display Data Channel / Command Interface) to enable centralized software-side control of monitor settings such as brightness
- additional, independent management network interface for configuration
- manual bandwidth management to adjust the required bandwidth
- With the integrated IP-MUX functionality the console modules offer the possibility to access different computer modules (one after the other). To use this function, you can connect a maximum of 20 computers to separate computer modules. The computer modules are configurated as targets in the console module and can be connected via the local on-screen display.

EXTENSIONS

DEVICE

- External power supply via an external USB Type-C PD power pack or via the G&D MultiPower-12-TypeC, which ensures centralized and redundant power supply.
- Device mounting via RackMount sets, TableMount sets, G&D 19" DeviceCarrier for VisionXS 2.0 or other mounting tools

SYSTEM EXTENSION

- You can integrate the matrix-compatible KVM-over-IP extenders into a complete installation with a ControlCenter-IP or ControlCenter-IP-XS, even at a later point in time. This provides you with even greater flexibility through the possibility of distributed access – and the existing components can continue to be used.

PANELS AND CONNECTORS

FRONT



Aperture designation	Design	Description
Service	USB-C socket	Connection for service purpose
Network	RJ45 socket	Port for IP network
Audio	3,5-mm jack plug	Connection to computer - Audio
All USB CPU	USB-C socket	Connection to computer - USB
K/M USB CPU	USB-C socket	Optional connection to computer - USB, only for keyboard and mouse signals

BACK

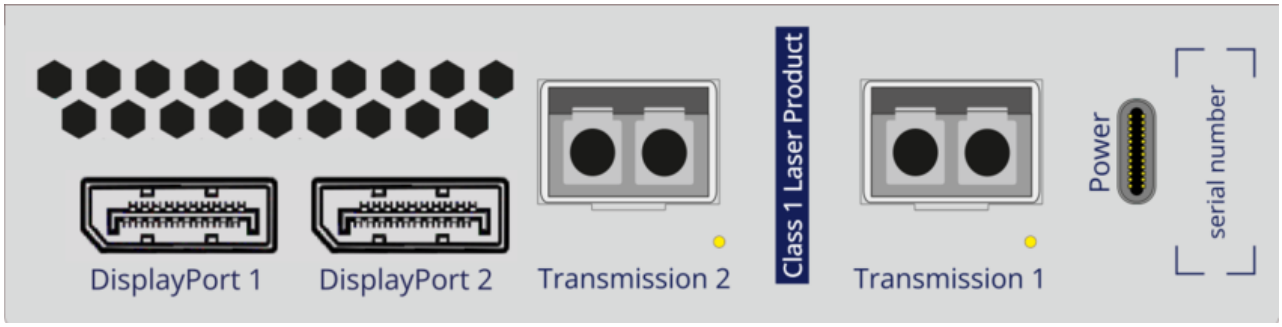

Aperture designation	Design	Description
DisplayPort 1	DisplayPort socket	Connection to computer - Video
DisplayPort 2	DisplayPort socket	Connection to computer - Video
Transmission 2	LC Duplex socket	Data transmission to console module or matrix switch over IP network redundant (FIBER)
Transmission 1	LC Duplex socket	Data transmission to console module or matrix switch over IP network (FIBER)
Power	USB-C socket	Power supply USB-PD (Power Delivery)

SCHEMATIC REPRESENTATION

KVM-over-IP extender operation

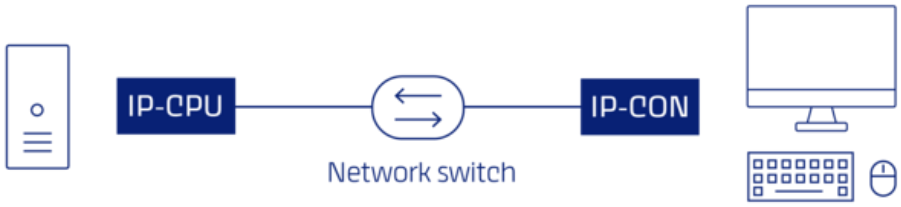

KVM-over-IP matrix operation

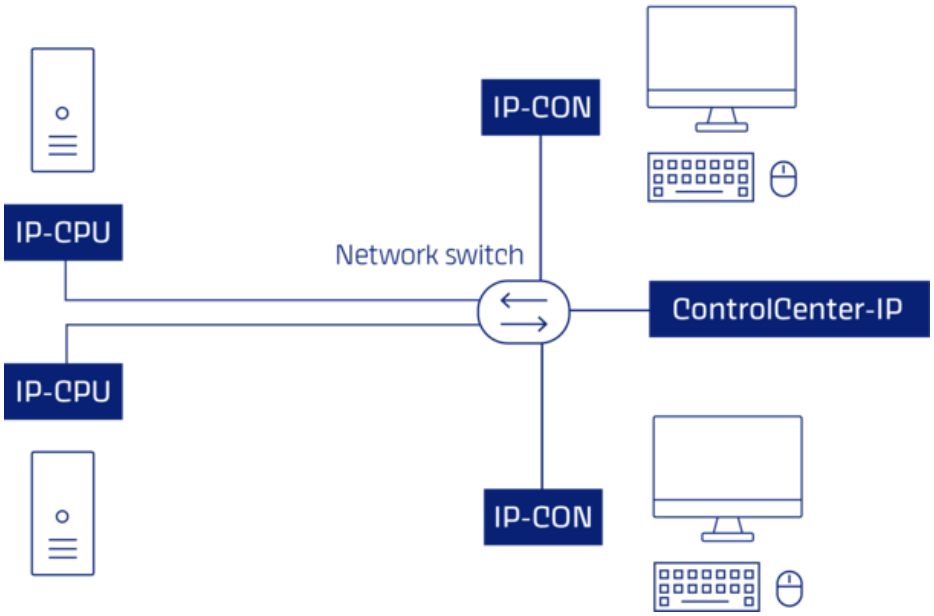

TECHNICAL DATA

General	Brand	G&D
	Product group	KVM extenders
	Product Family	VisionXS-IP 2.0
	Country of origin	Germany
	KVM matrix system component	Computer module (digital)
	Power Supply	no redundancy
Transmission	Number of transmission channels	1
	Redundant transmission channels	Redundant KVM transmission available
	Range	550 m (50.0/125µm, OM2 - 500MHz*km) 500 m (50.0/125µm, OM2 - 400MHz*km) 220 m (62.5/125µm, OM1 - 160MHz*km) 275 m (62.5/125µm, OM1 - 200MHz*km)
	Laser class	Class 1
	Type of interface	LC-Duplex
	Wavelength	850 nm
	Medium	Fiber MM
	Data rate	1 Gbit/s
Video input	Quantity	2
	Format	DisplayPort 1.1 (HBR)
	Colour depth	24 bit

	Pixel encoding	RGB 4:4:4 (24 bpp / 8 bpc)
	Pixel rate ca.	25 MPixel/s to 300 MPixel/s
	Vertical frequency	24 Hz to 120 Hz
	Horizontal frequency	25 kHz to 185 kHz
	Exemplary resolutions	4096 × 2160 (30 Hz) 4096 × 2160 (25 Hz) 4096 × 2160 (24 Hz) 3840 × 2160 (30 Hz) 3840 × 2160 (25 Hz) 3840 × 2160 (24 Hz) 2560 × 1600 (60 Hz) 2048 × 2048 (60 Hz) 1920 × 1200 (60 Hz) 1920 × 1080 (60 Hz)
	General Notes	Further VESA and CTA standardised resolutions possible within pixel rate and horizontal/vertical frequency.
	Supported industry standards	Display Data Channel Command Interface (DDC/CI) Extended Display Identification Data (EDID)
Audio 1	Transmission type	2-channel LPCM Stereo DTS AC3
	Resolutions	24 bit 20 bit 16 bit
	Sampling rate	up to 192 kHz
	Audio support	Digital Embedded
Audio 2	Transmission type	Stereo Transparent Bidirectional

	Resolutions	24 bit digital
	Sampling rate	up to 96 kHz
	Bandwidth	22 kHz
	Audio support	Analog
USB	Separate USB transmission port	no
	Specification	USB 2.0
	GenericUSB support	1 device
	Medium	Embedded
	Transmission rate	max. 25 Mbit/s (Full Speed)
	USB classes	Mass Storage (MSC / UMS) Human Interface Device (HID) SmartCard
Network	Quantity	1
	Medium	CAT5 CAT6 CAT7
	Data rate	10 Mbit/s 100 Mbit/s
Maintenance	Update via	ConfigPanel (Network)
	Serviceport settings	460800bps (8/N/1)
Housing	Material	Sheet steel, powder-coated
	Active cooling (fan)	yes
	Width ca.	115 mm / 4.53 in
	Height ca.	32 mm / 1.26 in

	Depth ca.	222 mm / 8.74 in
	IP protection class	IP20
Operating conditions	Operating environment temperature	5 °C to 45 °C / 41 °F to 113 °F
	Operating air humidity, non-condensing	20 % to 80 %
	Area of application	Indoor use
	Maximum operating altitude above sea level	3,048 m
	Storage environment temperature	-20 °C to 60 °C / -4 °F to 140 °F
	Storage air humidity, non-condensing	15 % to 85 %
	MTBF	200,000 h at 25°C (77 °F)
	Conformities	RoHS compliant (see downloads) REACH compliant (see downloads) FCC compliant (see manual) CE compliant (see downloads) TAA compliant (see downloads) UKCA compliant (see downloads) WEEE (reg. no. DE30763240)
Power supply	Quantity	1
	Type	External
	Power consumption (USB-PD)	22.5 W

MORE VARIANTS

Description	Article number
VisionXS-IP-CPU-2F(M)-DP-HR 2.0 Redundant KVM-over-IP computer module with link aggregation for the transmission of DisplayPort signals, transmission via fiber multimode and over IP-based networks	A1110937
VisionXS-IP-CPU-2F(M)-DP-HR-DH-DT 2.0 Redundant KVM-over-IP computer module with link aggregation for the transmission of DisplayPort signals, transmission via fiber multimode and over IP-based networks	A1110902
VisionXS-IP-CPU-2F(M)-DP-HR-DH-UG 2.0 Redundant KVM-over-IP computer module with link aggregation for the transmission of DisplayPort signals, transmission via fiber multimode and over IP-based networks	A1110895
VisionXS-IP-CPU-2F(M)-DP-HR-DH-UG-DT 2.0 Redundant KVM-over-IP computer module with link aggregation for the transmission of DisplayPort signals, transmission via fiber multimode and over IP-based networks	A1110888
VisionXS-IP-CPU-2F(M)-DP-HR-DT 2.0 Redundant KVM-over-IP computer module with link aggregation for the transmission of DisplayPort signals, transmission via fiber multimode and over IP-based networks	A1110930
VisionXS-IP-CPU-2F(M)-DP-HR-LC-DT 2.0 Redundant KVM-over-IP computer module with link aggregation for the transmission of DisplayPort signals, transmission via fiber multimode and over IP-based networks	A1111005
VisionXS-IP-CPU-2F(M)-DP-HR-LC-UG-DT 2.0 Redundant KVM-over-IP computer module with link aggregation for the transmission of DisplayPort signals, transmission via fiber multimode and over IP-based networks	A1110998
VisionXS-IP-CPU-2F(M)-DP-HR-UG 2.0 Redundant KVM-over-IP computer module with link aggregation for the transmission of DisplayPort signals, transmission via fiber multimode and over IP-based networks	A1110923
VisionXS-IP-CPU-2F(M)-DP-HR-UG-DT 2.0 Redundant KVM-over-IP computer module with link aggregation for the transmission of DisplayPort signals, transmission via fiber multimode and over IP-based networks	A1110916
VisionXS-IP-CPU-F(M)-DP-HR 2.0 KVM-over-IP computer module for the transmission of DisplayPort signals, transmission via fiber multimode and over IP-based networks	A1110941

Description	Article number
VisionXS-IP-CPU-F(M)-DP-HR-DH 2.0 KVM-over-IP computer module for the transmission of DisplayPort signals, transmission via fiber multimode and over IP-based networks	A1110913
VisionXS-IP-CPU-F(M)-DP-HR-DH-DT 2.0 KVM-over-IP computer module for the transmission of DisplayPort signals, transmission via fiber multimode and over IP-based networks	A1110906
VisionXS-IP-CPU-F(M)-DP-HR-DH-UG 2.0 KVM-over-IP computer module for the transmission of DisplayPort signals, transmission via fiber multimode and over IP-based networks	A1110899
VisionXS-IP-CPU-F(M)-DP-HR-DH-UG-DT 2.0 KVM-over-IP computer module for the transmission of DisplayPort signals, transmission via fiber multimode and over IP-based networks	A1110892
VisionXS-IP-CPU-F(M)-DP-HR-DT 2.0 KVM-over-IP computer module for the transmission of DisplayPort signals, transmission via fiber multimode and over IP-based networks	A1110934
VisionXS-IP-CPU-F(M)-DP-HR-LC-DT 2.0 KVM-over-IP computer module for the transmission of DisplayPort signals, transmission via fiber multimode and over IP-based networks	A1111009
VisionXS-IP-CPU-F(M)-DP-HR-LC-UG-DT 2.0 KVM-over-IP computer module for the transmission of DisplayPort signals, transmission via fiber multimode and over IP-based networks	A1111002
VisionXS-IP-CPU-F(M)-DP-HR-UG 2.0 KVM-over-IP computer module for the transmission of DisplayPort signals, transmission via fiber multimode and over IP-based networks	A1110927
VisionXS-IP-CPU-F(M)-DP-HR-UG-DT 2.0 KVM-over-IP computer module for the transmission of DisplayPort signals, transmission via fiber multimode and over IP-based networks	A1110920

CONTACT

WE ARE HERE FOR YOU!

If you have any further questions, we are looking forward to advising you on your individual project requirements.

TECHNICAL SALES

Tel.: +1-833-928-1976
Fax: +1-833-928-1976
E-Mail: sales.us@gdsys.com

HEADQUARTERS

Panoptec Europe GmbH
Obere Leimbach 9 | 57074 Siegen | NRW |
Deutschland

Tel.: +49 271 23872-0
Fax: +49 271 23872-120
E-Mail: sales@panoptec.com

US OFFICE

G&D North America Inc.
4540 Kendrick Plaza Drive | Suite 100
Houston, TX 77032 | United States

Tel.: +1-346-620-4362
E-Mail: sales.us@gdsys.com

MIDDLE EAST OFFICE

Panoptec Europe GmbH
Dubai Studio City | DSC Tower
12th Floor, Office 1208 | Dubai, UAE

Tel.: +971 4 5586178
E-Mail: sales@panoptec.com

APAC OFFICE

Panoptec Europe GmbH
60 Anson Road #17-01
Singapore 079914

Tel.: +65 9685 8807
E-Mail: sales@panoptec.com