VISIONXS-CPU-F(S)-MC2-DP-UHR-LC-DT 2.0

KVM extenders, Article number A1111067

The matrix-compatible KVM extenders of the VisionXS-DP-UHR 2.0 series extend keyboard, video, and mouse signals, as well as other peripheral data (e.g., audio and USB), via a dedicated CAT or fiber connection (up to 10,000 m). An extender system consists of a computer module (CPU) and a compatible console module (CON). Computers can be controlled in near real-time – both in extender and matrix applications. The VisionXS-DP-UHR 2.0 series supports DisplayPort1.2 for ultra-high-resolution video up to 4096 × 2160 (60 Hz) or 5120 × 2160 (50 Hz). Video data is processed pixel-perfectly and offers excellent hand-eye coordination, thanks to bluedec™ – G&D's advanced, multi-stage, lossless compression technology.

SCOPE OF DELIVERY

Quantity	Description	Article number
1	PowerCable-2 Standard cable 2m	A6300057
2	DP1.4-Cable-M/M-2 SK13357 2m	A6300173
1	TypeC-Service-Cable-M/M-2, 2m, USB Type-A / Type-C	A6200112
1	RS232-M/F-2 cable RS232 2m	A6300023
2	Audio-M/M-2-ferrite cable 2m	A6300083
1	Audio adapter cable, 1x 3.5mm jack plug to 2x 3.5mm jack socket	A3110017
1	Safety instructions flyer - FCC class B	A9100371
1	19" RM-Set-VXS2.0-442_MP12TypeC-1RU	A7000072

DETAILS

VIDEO

- bluedec™ – advanced developed multi-stage compression for best video quality and practically latency-free transmission. This method enables pixel-perfect video transmission with efficient bandwidth use.
- The end devices can be flexibly combined with each other, even if they process different video signals (Mix & Match)
- EDID data utilization from the workplace monitor
- Flexible EDID profile options for optimized monitor settings
- Resolution up to
  5120 × 2160 @ 50 Hz,
  5120 × 1440 @ 60 Hz,
  4096 × 2160 @ 60 Hz,
  2560 × 1440 @ 144 Hz,
  1920 × 1080 @ 240 Hz
- Resolution up to
  5120 × 2160 @ 50 Hz,
  5120 × 1440 @ 60 Hz,
  4096 × 2160 @ 60 Hz,
  2560 × 1440 @ 144 Hz,
  1920 × 1080 @ 240 Hz

SIGNALS

- Embedded stereo audio (DisplayPort Digital, 2 channel LPCM, AC3, DTS)
- Transparent bidirectional audio signals (stereo)
- Transparent RS232 (max. 115,200 bps)
- GenericUSB support for USB classes HID (Human Interface Device), SmartCard and mass storage
- The product allows the use of a GenericUSB device via a console module. For this, both the used console module and the used computer module must support the use of a GenericUSB device.

TRANSMISSION

- The transmission distance is up to 10,000 meters over fiber singlemode optics, incl. transmission module(s)/SFP transceiver(s)

DEVICE

- Improved security through physical separation between workplaces and computers
- Access to standard interfaces of the computer, with no software installation required
- New enclosure design with improved cooling, optimized interface placement, and robust surface finishing – for higher reliability and long service life even in demanding environments

- Compact design for space-saving installation within a VisionXS 2.0 DeviceCarrier (1 or 3 RU)
- The devices are compatible with the ControlCenter-Digital and ControlCenter-Compact series (matrix operation) and other end devices for computer and workplace connections (extender operation)
- PowerPack not included in the scope of delivery
- DT variant:
  - Power supply via internal power supply unit
  - In combination with an external power supply, a redundant power supply can be established
  - RS232 is provided as standard
- 2C/2F variant (comparable to UC/CON-2): Two transmission paths (CAT or Fiber) for redundancy
  - Computer modules can connect to various counterparts, such as compatible console modules or KVM matrix switches
  - Console modules can connect to different counterparts, such as compatible computer modules or KVM matrix switches, with switching controlled via hotkey or automatically depending on configuration
  - 2C/2F variants are never available with U2, since the second transmission interface is used for transmitting USB 2.0 data.
- LC variant: Optional local console on the CPU module including all video channels
  - In addition to the remote workplace, a full-featured local access point is available, providing direct access to all video and control channels.
  - Exclusive or concurrent operation
    Allows simultaneous use by optional local and remote workplaces. Input on one side temporarily locks the other. A key combination activates exclusive mode instantly; another releases shared access. The lock duration is configurable.
- Extended USB input side with TypeC and separate USB K/M interface – enables the optional physical separation of keyboard/mouse signals and USB data stream for enhanced security.

WARRANTY

- A 3-year, free of charge product guarantee
- For an additional fee guarantee extension possible

FEATURES

SECURITY FEATURES

- Bootloader, operating system, and firmware form a "Trusted Computing Platform" with automatic integrity checks during system startup
- Integrated Trusted Platform Module (TPM) protects all access and configuration data from being spied on or tampered with by third parties
- Console modules do not store security-relevant information such as login credentials, which could be extracted in the event of device loss
- Monitoring of system states such as status, power supply, temperature and computer modules and console modules are monitored as well
- Each monitoring value can be enabled individually; critical states raise an alarm, which authorized users can acknowledge to downgrade it to warning level
- Syslog logging locally and to up to two servers, via TCP or UDP, with configurable port, eight severity levels per the syslog standard and ISO 8601 timestamps
- Logged events include user logins, failed login attempts, changes to user rights, connections to remote targets and failed backups
- SNMP agent supporting SNMPv2c and SNMPv3; for SNMPv3, authentication via SHA-1 through SHA-512, encryption with AES128, AES192 or AES256, and security levels up to authPriv
- Access to the SNMP agent can be restricted to defined source IP addresses or network segments (IPv4 and IPv6)
- SNMP notifications to multiple receivers, sent either as traps or as acknowledged informs, with a configurable severity threshold
- Comprehensive rights management and user administration, allowing precise control over which user can access which resources
- Option for activatable access protection (default operating mode in matrix systems), in which authentication is required before accessing computer sources
- Support for external directory services (Active Directory, Radius, LDAP) to meet company security policies
- To comply with individual password policies and improve security, password complexity can be configured system-wide
- Configurable login options, such as displaying terms of use or setting the maximum acceptable number of failed login attempts, can enhance system security
- Auto Backup Function: Automates backups at user-defined intervals and replaces manual intervention – ensuring reliable, timely data protection without the need for continuous monitoring
- Freeze function: If the video signal is lost, the last displayed image is frozen and highlighted with a colored frame and timer
- 2-Factor-Authentication (2FA) – is integrated by default in KVM extenders and enhances security by requiring a second, possession-based factor during user authentication:

- The traditional password authentication is combined with a time-limited, single-use code (Time-Based-One-Time-Password - TOTP)
- You can choose between using the internal authentication server provided in the device or an external directory service
- Authenticator apps or hardware token can be used
- This additional layer of protection prevents unauthorized access and ensures the highest level of security, particularly in sensitive IT environments

OPERATION FEATURES

- Ready for operation out of the box, no additional configuration required
- Permanent keyboard/mouse emulation ensures a stable system
- Compatibility with special USB-HID input devices
- Operation via multilingual on-screen display (OSD) and hotkeys
- Configuration and update via the multilingual HTML5 web interface “Config Panel 21” (Java-free)
- Support of DDC/CI (Display Data Channel / Command Interface) to enable centralized software-side control of monitor settings such as brightness

EXTENSIONS

DEVICE

- External power supply via an external USB Type-C PD power pack or via the G&D MultiPower-12-TypeC, which ensures centralized and redundant power supply.
- Device mounting via RackMount sets, TableMount sets, G&D 19” DeviceCarrier for VisionXS 2.0 or other mounting tools

SYSTEM EXTENSION

- You can integrate the matrix-compatible extenders into a complete installation with a ControlCenter-Compact or ControlCenter-Digital, even at a later point in time. This provides you with even greater flexibility through the possibility of distributed access – and the existing components can continue to be used.

INTERFACES

FRONT

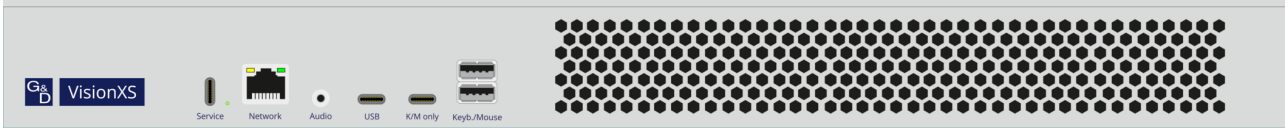

No interfaces available

BACK

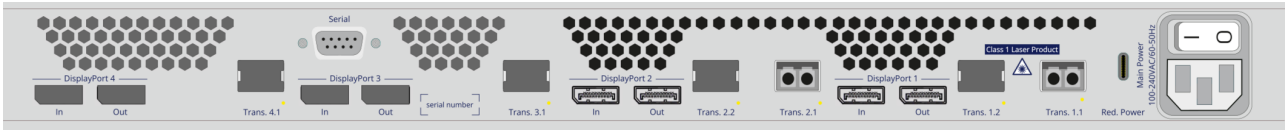

No interfaces available

SCHEMATIC REPRESENTATION

Dedicated extender operation



Dedicated matrix operation

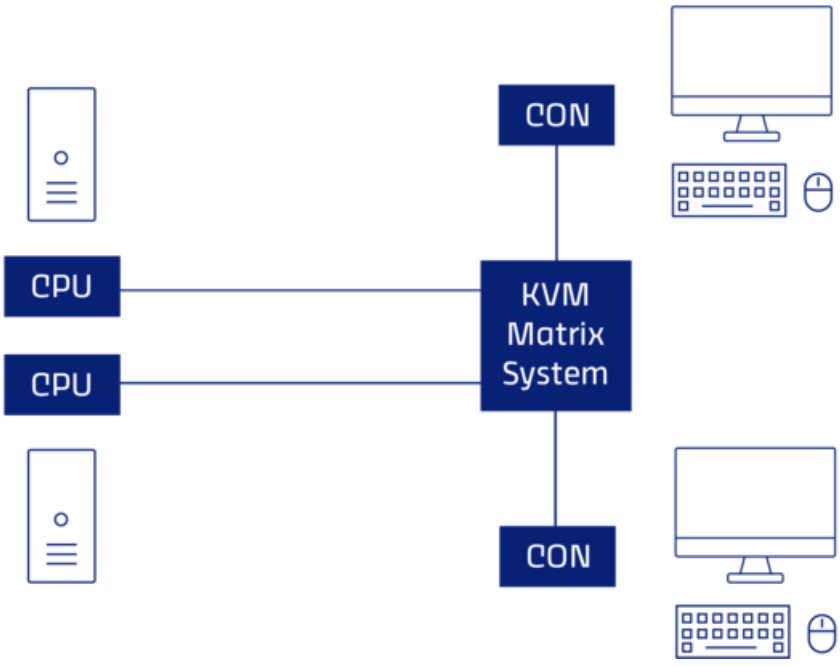

TECHNICAL DATA

General	Brand	G&D
	Product group	KVM extenders
	Product Family	VisionXS 2.0
	Country of origin	Germany
	Number of workplaces	1
	KVM matrix system component	Computer module (digital)
	Power Supply	Redundancy without load balancing
Input options	USB mouse	yes
	USB keyboard	yes
Transmission	Number of transmission channels	2
	Redundant transmission channels	no redundant KVM transmission
	Range	10,000 m (9/125µm, OS1)
	Laser class	Class 1
	Type of interface	LC-Duplex
	Wavelength	1,310 nm
	Medium	Fiber SM
	Data rate	2.5 Gbit/s
Video input	Quantity	2
	Format	DisplayPort 1.2 (LBR, HBR, HBR2, SingleStream-Transport (SST))

	Colour depth	24 bit
	Pixel encoding	RGB 4:4:4 (24 bpp / 8 bpc)
	Pixel rate ca.	25 MPixel/s to 600 MPixel/s
	Vertical frequency	24 Hz to 240 Hz
	Horizontal frequency	25 kHz to 295 kHz
	Exemplary resolutions	4096 × 2160 (60 Hz) 3840 × 2160 (60 Hz) 2560 × 1600 (60 Hz) 2560 × 1440 (144 Hz) 2048 × 2048 (60 Hz) 1920 × 1200 (60 Hz) 1920 × 1080 (240 Hz) 1920 × 1080 (60 Hz) 5120 × 1440 (60 Hz) 5120 × 2160 (50 Hz)
	General Notes	Further VESA and CTA standardised resolutions possible within pixel rate and horizontal/vertical frequency.
	Supported industry standards	Display Data Channel Command Interface (DDC/CI) Extended Display Identification Data (EDID)
Video output	Quantity	2
	Format	DisplayPort 1.2 (LBR, HBR, HBR2, SingleStream-Transport (SST))
	Colour depth	24 bit
	Pixel encoding	RGB 4:4:4 (24 bpp / 8 bpc)
	Pixel rate ca.	25 MPixel/s to 600 MPixel/s
	Vertical frequency	24 Hz to 240 Hz

	Horizontal frequency	25 kHz to 295 kHz
	Exemplary resolutions	4096 × 2160 (60 Hz) 3840 × 2160 (60 Hz) 2560 × 1600 (60 Hz) 2560 × 1440 (144 Hz) 2048 × 2048 (60 Hz) 1920 × 1200 (60 Hz) 1920 × 1080 (240 Hz) 1920 × 1080 (60 Hz) 5120 × 1440 (60 Hz) 5120 × 2160 (50 Hz)
	General Notes	Further VESA and CTA standardised resolutions possible within pixel rate and horizontal/vertical frequency.
	Supported industry standards	Display Data Channel Command Interface (DDC/CI) Extended Display Identification Data (EDID)
Audio 1	Transmission type	2-channel LPCM Stereo DTS AC3
	Resolutions	24 bit 20 bit 16 bit
	Sampling rate	up to 48 kHz
	Audio support	Digital Embedded
Audio 2	Transmission type	Stereo Transparent Bidirectional
	Resolutions	24 bit digital
	Sampling rate	up to 96 kHz

	Bandwidth	22 kHz
	Audio support	Analog
USB	Separate USB transmission port	no
	Specification	USB 2.0
	GenericUSB support	1 device
	Medium	Embedded
	Transmission rate	max. 25 Mbit/s (Full Speed)
	USB classes	Mass Storage (MSC / UMS) Human Interface Device (HID) SmartCard
Serial	Standard	RS232
	Transparent transmission	yes
	Data rate	115,200 bps
	Signals	TxD RxD RTS CTS GND 5V
Network	Quantity	1
	Medium	CAT5 CAT6 CAT7
	Data rate	10 Mbit/s 100 Mbit/s
Maintenance	Update via	ConfigPanel (Network)

	Serviceport settings	460800bps (8/N/1)
Housing	Material	Sheet steel, powder-coated
	Active cooling (fan)	yes
	Width ca.	441 mm / 17.36 in
	Height ca.	44 mm / 1.73 in
	Depth ca.	223 mm / 8.78 in
	IP protection class	IP20
Operating conditions	Operating environment temperature	5 °C to 45 °C / 41 °F to 113 °F
	Operating air humidity, non-condensing	20 % to 80 %
	Area of application	Indoor use
	Maximum operating altitude above sea level	3,048 m
	Storage environment temperature	-20 °C to 60 °C / -4 °F to 140 °F
	Storage air humidity, non-condensing	15 % to 85 %
	MTBF	200,000 h at 25°C (77 °F)
	Conformities	RoHS compliant (see downloads) REACH compliant (see downloads) FCC compliant (see manual) CE compliant (see downloads) UKCA compliant (see downloads) TAA compliant (see downloads) WEEE (reg. no. DE30763240)
Power supply 1	Quantity	1

Power supply 2	Type	Internal
	Input voltage	100-240 VAC
	Input frequency	60-50 Hz
	Quantity	1
	Type	External

ACCESSORY PRODUCTS

Image	Description	Article number
	PowerPack USB PD TypeC max. 65W 5V-20V USB TypeC power supply with power delivery, max. 65W, 5V-20V, incl. power cable	A4110063
	PowerPack USB PD TypeC max. 100W 5V-20V USB TypeC power supply with power delivery, max. 100W, 5V-20V, incl. power cable	A4110065

MORE VARIANTS

Description	Article number
VisionXS-CPU-2F(S)-DP-UHR-DT 2.0 Redundant Computer module for the transmission of DisplayPort1.2 signals to 2 different counterpart stations via fiber singlemode	A1111121
VisionXS-CPU-2F(S)-DP-UHR-LC-DT 2.0 Redundant Computer module for the transmission of DisplayPort1.2 signals to 2 different counterpart stations via fiber singlemode	A1111106
VisionXS-CPU-2F(S)-DP-UHR-LC-U-DT 2.0 Redundant Computer module for the transmission of DisplayPort1.2 signals to 2 different counterpart stations via fiber singlemode	A1111097
VisionXS-CPU-2F(S)-DP-UHR-U-DT 2.0 Redundant Computer module for the transmission of DisplayPort1.2 signals to 2 different counterpart stations via fiber singlemode	A1111112
VisionXS-CPU-F(S)-DP-UHR-DT 2.0 Computer module for the transmission of DisplayPort1.2 signals via fiber singlemode	A1111124
VisionXS-CPU-F(S)-DP-UHR-LC-DT 2.0 Computer module for the transmission of DisplayPort1.2 signals via fiber singlemode	A1111109
VisionXS-CPU-F(S)-DP-UHR-LC-U-DT 2.0 Computer module for the transmission of DisplayPort1.2 signals via fiber singlemode	A1111100
VisionXS-CPU-F(S)-DP-UHR-LC-U2-DT 2.0 Computer module for the transmission of DisplayPort1.2 signals via fiber singlemode	A1111103
VisionXS-CPU-F(S)-DP-UHR-U-DT 2.0 Computer module for the transmission of DisplayPort1.2 signals via fiber singlemode	A1111115
VisionXS-CPU-F(S)-DP-UHR-U2-DT 2.0 Computer module for the transmission of DisplayPort1.2 signals via fiber singlemode	A1111118
VisionXS-CPU-F(S)-MC2-DP-UHR-DT 2.0 Computer module for the transmission of DisplayPort1.2 signals via fiber singlemode	A1111076
VisionXS-CPU-F(S)-MC2-DP-UHR-LC-U-DT 2.0 Computer module for the transmission of DisplayPort1.2 signals via fiber singlemode	A1111061

Description	Article number
VisionXS-CPU-F(S)-MC2-DP-UHR-LC-U2-DT 2.0 Computer module for the transmission of DisplayPort1.2 signals via fiber singlemode	A1111064
VisionXS-CPU-F(S)-MC2-DP-UHR-U-DT 2.0 Computer module for the transmission of DisplayPort1.2 signals via fiber singlemode	A1111070
VisionXS-CPU-F(S)-MC2-DP-UHR-U2-DT 2.0 Computer module for the transmission of DisplayPort1.2 signals via fiber singlemode	A1111073
VisionXS-CPU-F(S)-MC4-DP-UHR-DT 2.0 Computer module for the transmission of DisplayPort1.2 signals via fiber singlemode	A1111094
VisionXS-CPU-F(S)-MC4-DP-UHR-LC-DT 2.0 Computer module for the transmission of DisplayPort1.2 signals via fiber singlemode	A1111085
VisionXS-CPU-F(S)-MC4-DP-UHR-LC-U-DT 2.0 Computer module for the transmission of DisplayPort1.2 signals via fiber singlemode	A1111079
VisionXS-CPU-F(S)-MC4-DP-UHR-LC-U2-DT 2.0 Computer module for the transmission of DisplayPort1.2 signals via fiber singlemode	A1111082
VisionXS-CPU-F(S)-MC4-DP-UHR-U-DT 2.0 Computer module for the transmission of DisplayPort1.2 signals via fiber singlemode	A1111088
VisionXS-CPU-F(S)-MC4-DP-UHR-U2-DT 2.0 Computer module for the transmission of DisplayPort1.2 signals via fiber singlemode	A1111091

CONTACT

WE ARE HERE FOR YOU!

If you have any further questions, we are looking forward to advising you on your individual project requirements.

TECHNICAL SALES

Tel.: +49 271 23872-333
Fax: +49 271 23872-120
E-Mail: sales@panoptec.com

HEADQUARTERS

Panoptec Europe GmbH
Obere Leimbach 9 | 57074 Siegen | NRW | Deutschland

Tel.: +49 271 23872-0
Fax: +49 271 23872-120
E-Mail: sales@panoptec.com

US OFFICE

G&D North America Inc.
4540 Kendrick Plaza Drive | Suite 100
Houston, TX 77032 | United States

Tel.: +1-346-620-4362
E-Mail: sales.us@gdsys.com

MIDDLE EAST OFFICE

Panoptec Europe GmbH
Dubai Studio City | DSC Tower
12th Floor, Office 1208 | Dubai, UAE

Tel.: +971 4 5586178
E-Mail: sales@panoptec.com

APAC OFFICE

Panoptec Europe GmbH
60 Anson Road #17-01
Singapore 079914

Tel.: +65 9685 8807
E-Mail: sales@panoptec.com